montavista VISION 2007

EMBEDDED LINUX DEVELOPERS CONFERENCE

Booting Linux on Embedded PowerPC™ Systems

Matt Tyrlik

Senior Software Engineer

montavista

Content

- Background
- Adding support for new platforms, the old way
- Linux arch/ppc versus arch/powerpc source code tree's
- ePAPR (Embedded Power Architecture Platform Requirements) and Power.org
- Firmware to OS interface, Device Tree (DT)
- Content of the DT
- Passing DT information to the operating system
- The flattened DT
- The DT compiler
- Accessing information from the DT from within the operating system
- Summary/References

Background

- Firmware role
  - OS Loader
  - Hardware abstraction
  - Hardware initialization
  - Hardware configuration
  - Virtualization, basic platform management
  - Manufacturing instrumentation, data collection, problem determination
- Firmware usage
  - IBM PowerPC pSeries: Open Firmware
  - Embedded PowerPC: PIBS, U-Boot, many others
  - Apple PowerPC: Open Firmware
  - Sun SPARC: Open Firmware used in Sun Solaris and Sun Linux products
  - HP: proprietary
  - Intel: compatible BIOS, EFI, ACPI, UEFI

Background

- Problem: Varied firmware environment found in embedded platforms
  - Firmware provides the operating system with minimum configuration information
    - Ethernet MAC addresses
    - Size of RAM
    - Processor speed
  - Configuration stored in EEPROM, ELASH, other devices
  - Problems with console output during the boot process
  - Passing command line arguments to the kernel
  - Specialized boot wrappers (embed_config() function for various systems)
  - Impossible to build a single kernel image that would support multiple systems
- Goals: Standardize information passing from firmware to operating system
  - Speed up development of Linux Support Packages (LSP)
  - Minimize changes required to support new hardware
  - Enable N, N-1 OS version support
  - Enable single kernel image to support multiple systems

Adding support for new platform, the old way

- Code changes spread out among various kernel files (kernel, syslib, platforms)
- Difficult to determine what changes are required for new platform
- Number of files need to be changed
- Significant amount of custom code required for new platforms
- Custom “pseudo” device discovery code required
  - Required for complex System On Chip (SOC) devices
  - Statically defines and maps devices
- Kernel dependant on .config files (override normal driver probe logic)
- Location of devices often hard coded, PPC405GP example
  - Ppc/platofrms/4xx/ibm405gp.h
    - #define UART0_IO_BASE 0xEF600300
    - #define UART1_IO_BASE 0xEF600400
  - Ppc/syslib/ppc4xx_setup.c
    - io_block_mapping(..) call needs to be added to support new UART address

arch/ppc versus arch/powerpc

- Currently two directories (arch/ppc and arch/powerpc) support PowerPC architecture
- No new platform support is being added to arch/ppc tree
- arch/powerpc supports PowerPC 64-bit and PowerPC 32-bit targets
- arch/ppc only supports PowerPC 32-bit targets
- Use of device tree is required for booting Linux under arch/powerpc tree
  - Device tree information can be passed though Open Firmware
  - Device tree information can be provided through flattened device tree
- With real Open Firmware
  - Linux kernel calls OF to scan the device tree
  - Linux transfers information to internal representation that is then used at run-time

ePAPR and Power.org

- Power.org (www.power.org)
  - Power.org's mission is to develop, enable and promote Power Architecture technology
  - Supports a number of standard and specification initiatives
- sPAPR (Server Power Architecture Platform Requirements) available now
  - To create a stable platform architecture to be used by server platforms based on Power processors
  - To create an architecture which will allow platforms to operate with previous versions of the OS
  - To minimize the support cost for multiple OS versions through the definition of common platform abstraction techniques.
  - sPAPR provides complete server platform definition that is not fully applicable to embedded systems
- ePAPR (Embedded Power Architecture Platform Requirements) available 4Q2007
  - Main effort in standardization of firmware to OS interface

ePAPR and Power.org (cont)

- ePAPR 1.0 addresses only boot services
  - How firmware initializes hardware and boots an OS
  - How configuration information is passed to OS, Device Tree (DT)
  - Multi core considerations
  - 32-bit and 64-bit considerations
- ePAPR is loosely related to IEEE 1275 (Open Firmware)
  - Takes device tree structure
- Draws heavily on on-going work being done in the PowerPC Linux community
- In the future ePAPR will address issues dealing with
  - Optional. Runtime Abstraction Services (RTAS)
    - Firmware component resident at runtime
    - Examples: time of day, reboot, power-off, memory allocation
  - Optional, Virtualization
    - OS to Hypervisor API

Firmware to OS interface, Device Tree

- Device tree provides a way to:
  - Represent hardware configuration in hierarchical way (each node except root has a parent)
  - Pass information from firmware to OS
- Device tree is made up of “nodes”

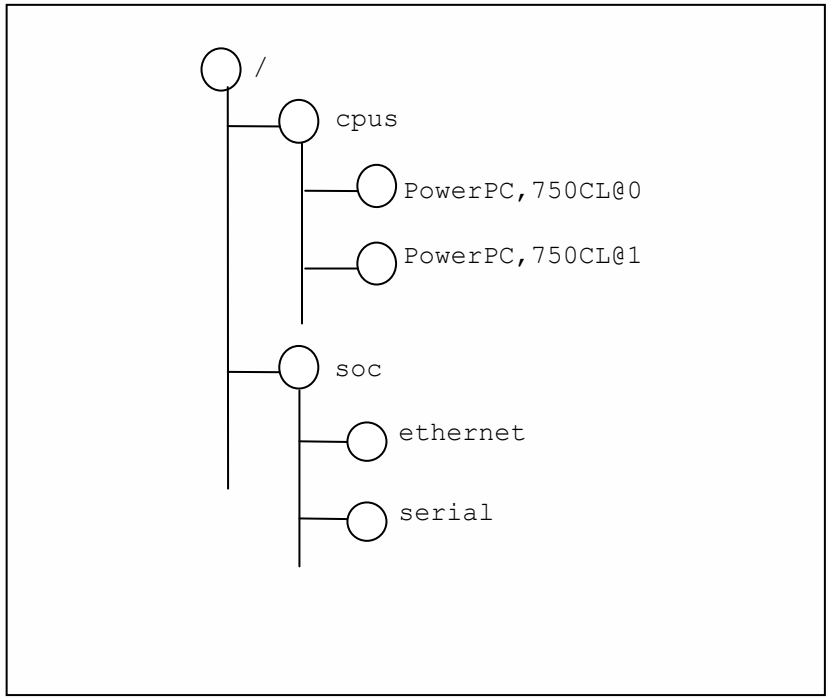

Firmware to OS interface, Device Tree (cont)

- Nodes represent devices and busses (there are few special cases)
  - /chosen node represents information passed from Firmware to OS
- /memreserve structure represents memory used by Firmware and DT itself
- Nodes have properties made out of name value pairs
  - Node values can be: numeric, strings, list of strings, tables, other structured information

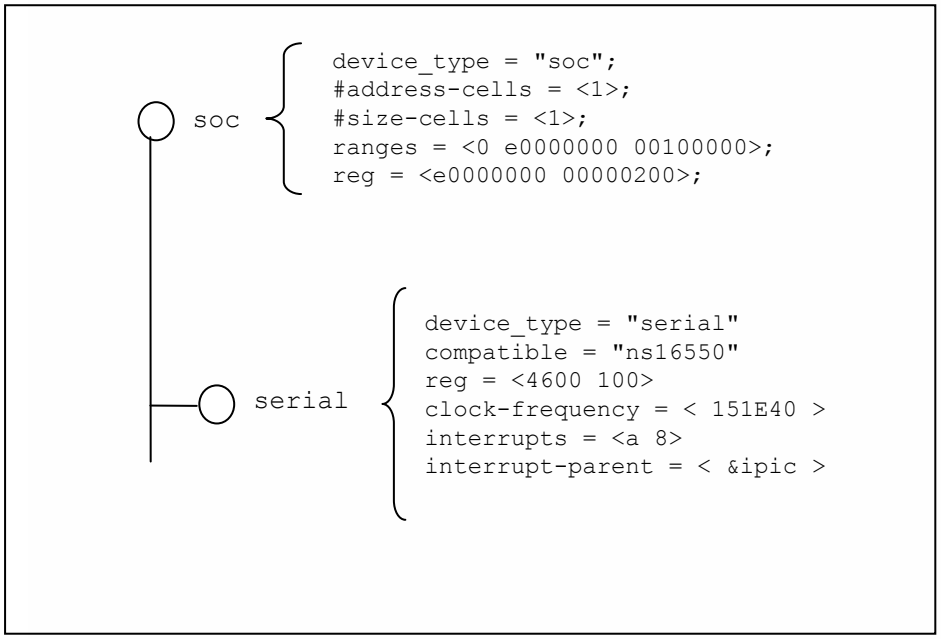

Firmware to OS interface, Device Tree (cont)

- Devices that can be discovered dynamically generally don't have to be included
  - PCI device discovery is well standardized and PCI devices don't have to be included
  - USB devices generally don't have to be included since they can be easily enumerated
- PCI host bridges generally have to be included
- Devices with atypical interrupt routing should be included
- Nodes representing devices and buses must have "compatible" property
  - Example: compatible = ""ibm,uic-440gp", "ibm,uic", compatible = "ns16550"
  - Compatible property is used for device driver matching in the kernel
  - Compatible property with in turn specifies properties that will be used to describe the node
    - Example for serial device: clock-frequency = <3F9C6000>, current-speed = <1c200>;
- Node name is made out of "unit name" and optional "unit address"
  - Example: serial@7c08, serial@6600
  - Unit addresses are used to differentiate multiple devices at the same level of hierarchy
- Node can be referred to from within the DT by using full node path names*

*: phandle can also be used

Firmware to OS interface, Device Tree (cont)

- Property values, as interpreted by client software (Linux kernel)
  - Empty, example: interrupt-controller.
  - u32, example: #size-cells = <6000>
  - string, example: bootargs = “console=ttyS0,115200”
  - prop-encoded-array, example: interrupt-map = <0800 0 0 1 &RT0 24 0 0800 0 0 2 &RT…>
  - phandle, example: phandle = < 12340001 >
  - stringlist, example: compatible = "ns16550“, “i8250”
- Some standard properties (in addition to compatible). Names are case sensitive.
  - reg: physical address and length of devices memory mapped register space
  - ranges: for bus node describes bus address mapping
  - device_type: defines device programming model
  - model: manufacturers model
  - phandle: unique numerical identifier for the node (Linux uses: linux,phandle) *
  - #address-calls and #size-cells: describe how the child devices should be addressed

*: flatten device tree property

Content of the Device Tree (cont)

- cpu node
  - Describes CPUs or cores in the system
  - Standard properties include: reg, clock-frequency, reservation-granule-size, etc
  - TLB, L1 cache, as well as multi level and shared caches can be described
- memory node
  - Required for all DT
  - Describes physical memory layout of the system
  - Only read/write memory should be described using memory node
- Number of other device nodes
  - See Documentation/powerpc/booting-without-of.txt file in Linux source code
  - Various bindings to “IEEE 1275” standard
  - ePAPR on Power.org WEB site, when available

Content of the Device Tree (cont)

- Example (partial) DT for PPC750CL system

```
/ {
        model = "41K7339";
        compatible = "ibm,holly";
        #address-cells = <1>;
        #size-cells = <1>;
        cpus {
                #address-cells = <1>;
                #size-cells =<0>;
                PowerPC,750CL@0 {
                        device_type = "cpu";
                        reg = <0>;
                        d-cache-line-size = <20>;
                        i-cache-line-size = <20>;
                        d-cache-size = <8000>;
                        i-cache-size = <8000>;
                        d-cache-sets = <80>;
                        i-cache-sets = <80>;
                        timebase-frequency = <2faf080>;
                        clock-frequency = <23c34600>;
                        bus-frequency = <bebc200>;
                        32-bit;
                };
        };
        memory@0 {
              device_type = "memory";
              reg = <00000000 20000000>;
        };

...
```

```
tsi109@c0000000 {
                device_type = "tsi-bridge";
                compatible = "tsi-bridge";
                #address-cells = <1>;
                #size-cells = <1>;
                ranges = <00000000 c0000000 00010000>;
                reg = <c0000000 00010000>;
                ethernet@6200 {
                   device_type = "network";
                   compatible = "tsi-ethernet";
                   #address-cells = <1>;
                   #size-cells = <0>;
                   reg = <6000 200>;
                   local-mac-address = [ 00 00 00 00 00 00 ];
                   interrupt-parent = <
                   &/tsi109@c0000000/pic@7400 >;
                   interrupts = <10 2>;
                   phy-handle = <&PHY1>;
                };
                MPIC: pic@7400 {
                   device_type = "open-pic";
                   compatible = "chrp,open-pic";
                   interrupt-controller;
                   #interrupt-cells = <2>;
                   reg = <7400 400>;
                   big-endian;
                };

...
```

Passing DT Information to the OS

- Device Tree information needs to be passed to the OS (or bootstrap) code
  - OS receives flattened (binary) representation of the Device Tree from bootstrap code (zImage)
- Through Open Firmware
  - Open Firmware constructs Device Tree on the fly
  - Bootstrap code calls Open Firmware and constructs binary representation of the DT
- Binary representation of the device tree passed directly to bootstrap code
  - Non “Open Firmware” firmware
  - Firmware contains largely static binary representation of the device tree
  - Firmware updates several values in the device tree (ex. network hardware address)
- Binary representation of the device tree compiled into bootstrap code
  - Used for boards with legacy firmware
  - Enables support for legacy platforms under arch/powerpc tree

Flattened Device Tree

- Flattened DT represents DT in a compact binary format
  - Relocatable. Can be moved without knowledge of the internals (no pointers)
  - Permits easy insert/delete/update operations (limits use of internal offsets)
  - Compact. Use of common string block.
  - Easily parsed by software
- Flattened DT made out of 4 sections
  - Header. Provides offsets to other sections and other basic information (boot CPU ID)
  - Memory reserve table (information contained in /memreserve node)
  - String block. All the ASCII string representing property names are contained in this section
  - Structure block. Contains structured data representing the DT

off_struct		
	OF_DT_BEGIN_NODE	structure block
+ 0x04	'/' 0 0 0	root node
+ 0x08	OF_DT_PROP	
+ 0x0C	0x00000005	"model"
+ 0x10	0x00000008	
+ 0x14	'M' 'y' 'B' 'o'	
+ 0x18	'a' 'r' 'd' 0	
⋮	⋮	
	OF_DT_END_NODE	
	OF_DT_END	

Example from "Device trees everywhere" paper

Device Tree Compiler

- Constructing binary representation of the DT by hand is error prone
- Device Tree Compiler (DTC) converts various DT representation
  - Input format
    - Text format (see page 14), binary representation (see page 16)
    - Filesystem (format in the /proc/device-tree filesystem)
  - Output format: binary representation, text format, assembler source
- DT checking: syntactic structure, semantic structure (moving away from semantic checking), Linux requirements
- Support for references, ex: interrupt-parent = < &/tsi109@C0000000/pic@7400 >
- Support for labels, ex: MPIC: pic@7400
- Source code for the current version of the DTC can be accessed by executing
  - git clone git://www.jdl.com/software/dtc.git
- Sample device tree files can be found under arch/powerpc/boot/dts
- DTC package contains library (libfdt) of functions that manipulate binary DT

Accessing DT Information within OS

- Bootstrap code uses DT
  - Serial port type, location
  - Host bridge setup
  - finddevice(), getprop() calls used to retrieve information from the DT
- The pointer to DT binary representation is passed in r3 to the Linux kernel
  - Rich set of API calls to retrieve information from the DT (arch/powerpc/kernel/prom.c)
  - Some API calls also included in arch/powerpc/kernel/prom_parse.c
  - of_find_compatible_node(), find node based in token in “compatible” property
  - of_get_property(), find property given node and property name
  - of_find_node_by_type(), searched for node given “device_type” property
  - of_translate_address(), translates address from DT to CPU physical address:
- At run time the DT information can be accessed through /proc/device-tree FS

Summary/References

- Summary
  - Use of DT can minimize changes required to support new hardware
  - Speed up development of Linux Support Packages (LSP) through improved code reuse
  - Enable single kernel image to support multiple systems
- References
  - David Gibson, Benjamin Herrenschmidt “Device Trees Everywhere”, OzLabs, 13 February 2006, <http://www.ozlabs.com/~dgibson/home/papers/dtc-paper.pdf>
  - IEEE Standard for Boot (Initialization Configuration) Firmware: Core Requirements and Practices, IEEE Std 1275-1994, IEEE Computer Society, 345 E. 47th St, New York, NY 10017, USA, 1994.
  - “Booting the Linux/ppc kernel without Open Firmware”, Documentation/powerpc/booting-without-of.txt in Linux source code

montavista VISION 2007
EMBEDDED LINUX DEVELOPERS CONFERENCE

© Copyright International Business Machines Corporation 2007. All Rights Reserved.

Printed in the United States of America 2007. The following are trademarks of International Business Machines Corporation in the United States, or other countries, or both.

IBM Logo
Power PowerPC

IEEE and IEEE 802 are registered trademarks in the United States, owned by the Institute of Electrical and Electronics Engineers.

Linux is registered trademark of Linus Torvalds.

Other company, product and service names may be trademarks or service marks of others.

All information contained in this document is subject to change without notice. The products described in this document are NOT intended for use in applications such as implantation, life support, or other hazardous uses where malfunction could result in death, bodily injury, or catastrophic property damage. The information contained in this document does not affect or change IBM product specifications or warranties. Nothing in this document shall operate as an express or implied license or indemnity under the intellectual property rights of IBM or third parties. All information contained in this document was obtained in specific environments, and is presented as an illustration. The results obtained in other operating environments may vary.

THE INFORMATION CONTAINED IN THIS DOCUMENT IS PROVIDED ON AN "AS IS" BASIS. In no event will IBM be liable for damages arising directly or indirectly from any use of the information contained in this document.

IBM Microelectronics Division
2070 Route 52, Bldg 330 Hopewell Junction, NY 12533-6351

The IBM home page can be found at
http://www.ibm.com

The IBM Systems and Technology Group’s Semiconductor Solutions’ home page can be found at
http://www.ibm.com/chips

IBM